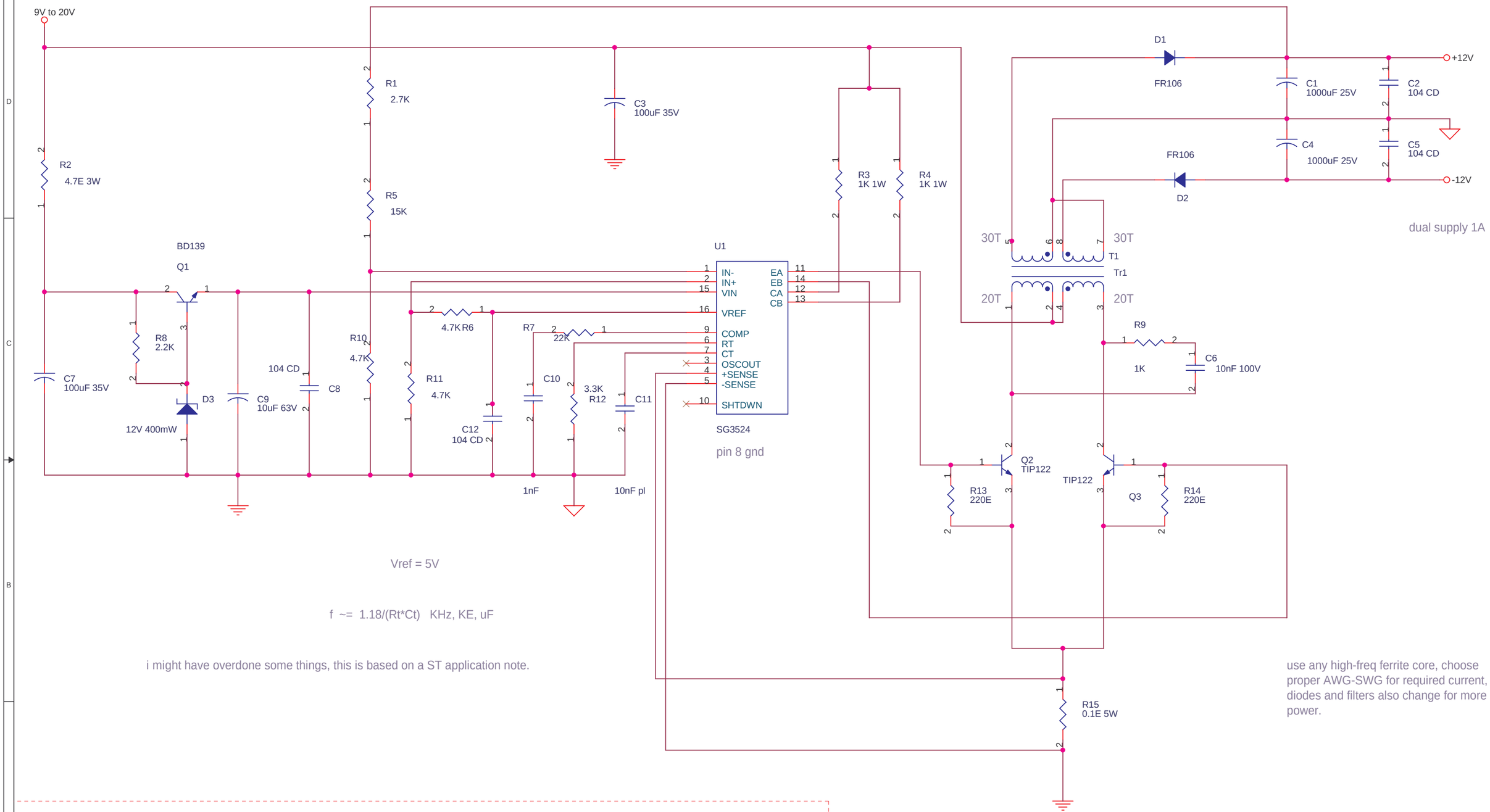

Vref = 5V

f ~= 1.18/(Rt*Ct) KHz, KE, uF

i might have overdone some things, this is based on a ST application note.

use any high-freq ferrite core, choose proper AWG-SWG for required current, diodes and filters also change for more power.

use 74HCT40XX chips in place of CD40XX for only 5V and high speed designs.
put 104 CD cap for all ICs from positive to negative close to IC, even if ommited in circuit, for opamps on dual supply two caps.
unused inputs of logic and opamps pull up or down to avoid oscillations and noise. connect supply of all chips if not mentioned.
"analog ground" and "digital ground" must be linked at power supply only, avoid loops, let grounds radiate from a ground plane.
use MFR 1% for all Resistors, 33E means 33 ohms, 22K means 22 kilo ohms, 1M is 1 megohm. 10T Trimpot means like 10 turn bourns.
'474 CD' is 47 with 4 zeros pF, 470000 pF, remove 3 zeros 470 nF, shift decimal 3 places 0.47uF. "pl" is plastic, low leakage multilayer.

http://delabs.topcities.com/
http://delabs.netfirms.com/
http://delabs.tripod.com/
http://geocities.com/delabs/
http://members.fortunecity.com/delabs/

delabs circuits and technologies

Title	dual supply circuit	
Size B	Document Number del20018	Rev 1
Date: Saturday, June 05, 2004	Sheet 1 of 1	