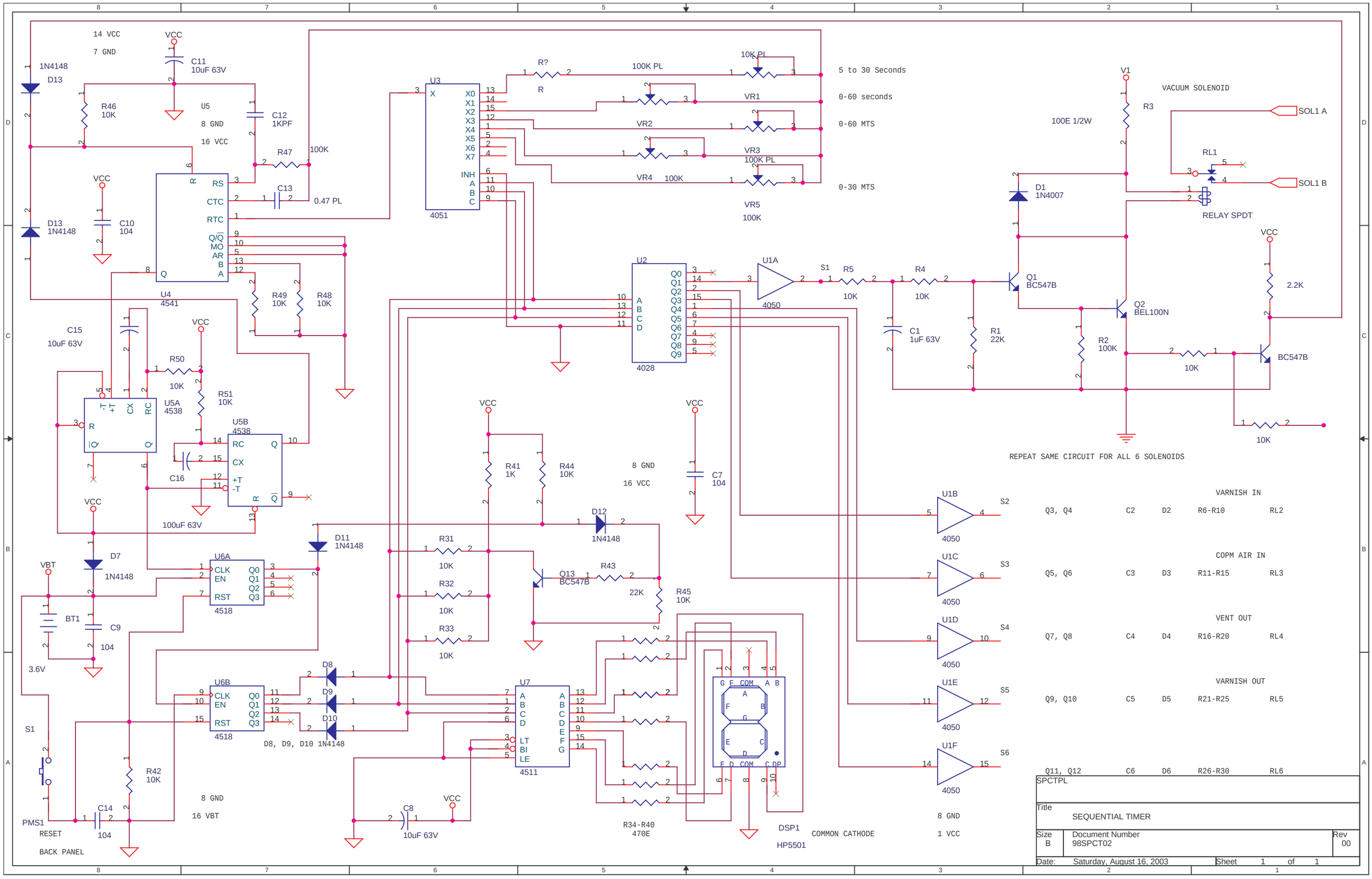
14 VCC
7 GND
VCC
C11
10uF 63V
1N4148
D13
R46
10K
U5
8 GND
16 VCC
C12
1KPF
R47
100K
C13
0.47 PL
U4
4541
R49
10K
R48
10K
C10
104
D13
1N4148
C15
10uF 63V
R50
10K
R51
10K
U5A
4538
U5B
4538
C16
100uF 63V
D7
1N4148
VBT
BT1
3.6V
C9
104
U6A
4518
U6B
4518
D11
1N4148
D8, D9, D10 1N4148
S1
PMS1
RESET
BACK PANEL
R42
10K
C14
104
8 GND
16 VBT
U3
4051
R?
R
100K PL
10K PL
VR1
VR2
VR3
VR4
100K
VR5
100K
5 to 30 Seconds
0-60 seconds
0-60 MTS
0-30 MTS
U2
4028
U1A
4050
S1
R5
10K
R4
10K
C1
1uF 63V
R1
22K
R2
100K
Q1
BC547B
Q2
BEL100N
D1
1N4007
V1
R3
100E 1/2W
VACUUM SOLENOID
SOL1 A
SOL1 B
RL1
RELAY SPDT
2.2K
BC547B
10K
REPEAT SAME CIRCUIT FOR ALL 6 SOLENOIDS
R41
1K
R44
10K
8 GND
16 VCC
C7
104
D12
1N4148
R31
10K
R32
10K
R33
10K
Q13
BC547B
R43
22K
R45
10K
U7
4511
R34-R40
470E
C8
10uF 63V
DSP1
HP5501
COMMON CATHODE
8 GND
1 VCC
U1B
U1C
U1D
U1E
U1F
4050
S2
S3
S4
S5
S6
VARNISH IN
Q3, Q4 C2 D2 R6-R10 RL2
COPM AIR IN
Q5, Q6 C3 D3 R11-R15 RL3
VENT OUT
Q7, Q8 C4 D4 R16-R20 RL4
VARNISH OUT
Q9, Q10 C5 D5 R21-R25 RL5
Q11, Q12 C6 D6 R26-R30 RL6
SPCTPL
Title
SEQUENTIAL TIMER
Size
B
Document Number
98SPCT02
Rev
00
Date: Saturday, August 16, 2003
Sheet 1 of 1