A. Temperature Control in Plastic Injection Molding.

FUSE RATING OF HRC FUSE

High Rupture Capacity (HRC) Fuse is Safe and Reliable.
10KW Heater at 230V is 10,000 / 230 in Amps of Fuse Rating.

i.e. Watts = Volts x Amps hence use 50 Amps Fuse.

Connect Power From Lighting (5 A) Line for Temperature Controller.

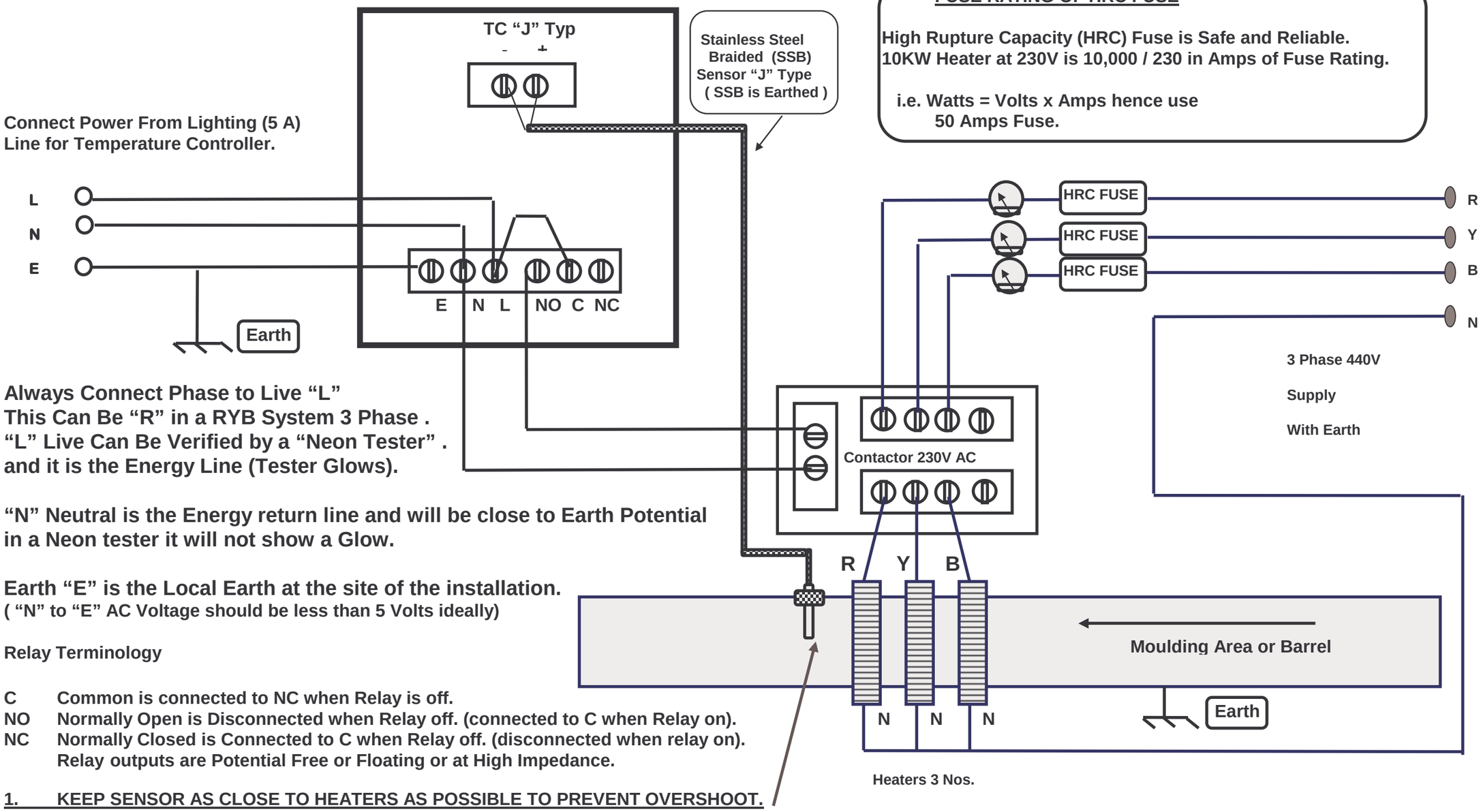

Always Connect Phase to Live "L"
This Can Be "R" in a RYB System 3 Phase .
"L" Live Can Be Verified by a "Neon Tester" .
and it is the Energy Line (Tester Glows).

"N" Neutral is the Energy return line and will be close to Earth Potential in a Neon tester it will not show a Glow.

Earth "E" is the Local Earth at the site of the installation.
("N" to "E" AC Voltage should be less than 5 Volts ideally)

Relay Terminology

C	Common is connected to NC when Relay is off.
NO	Normally Open is Disconnected when Relay off. (connected to C when Relay on).
NC	Normally Closed is Connected to C when Relay off. (disconnected when relay on).
	Relay outputs are Potential Free or Floating or at High Impedance.

1. **KEEP SENSOR AS CLOSE TO HEATERS AS POSSIBLE TO PREVENT OVERSHOOT.**
2. **REPLACE SENSOR IF DAMAGED OR CORRODED.**
3. **KEEP DEAD BAND AT MINIMUM FOR LEAST VARIATION.**

N **The Terminations of High Current Lines going to Heater must be very tight and crimped. Loose contacts will Spark and cause Fire.**

Application Note Given is for enhancing engineers information and is not a tested or working idea. The Correctness of above is not implied by our Company or Engineers