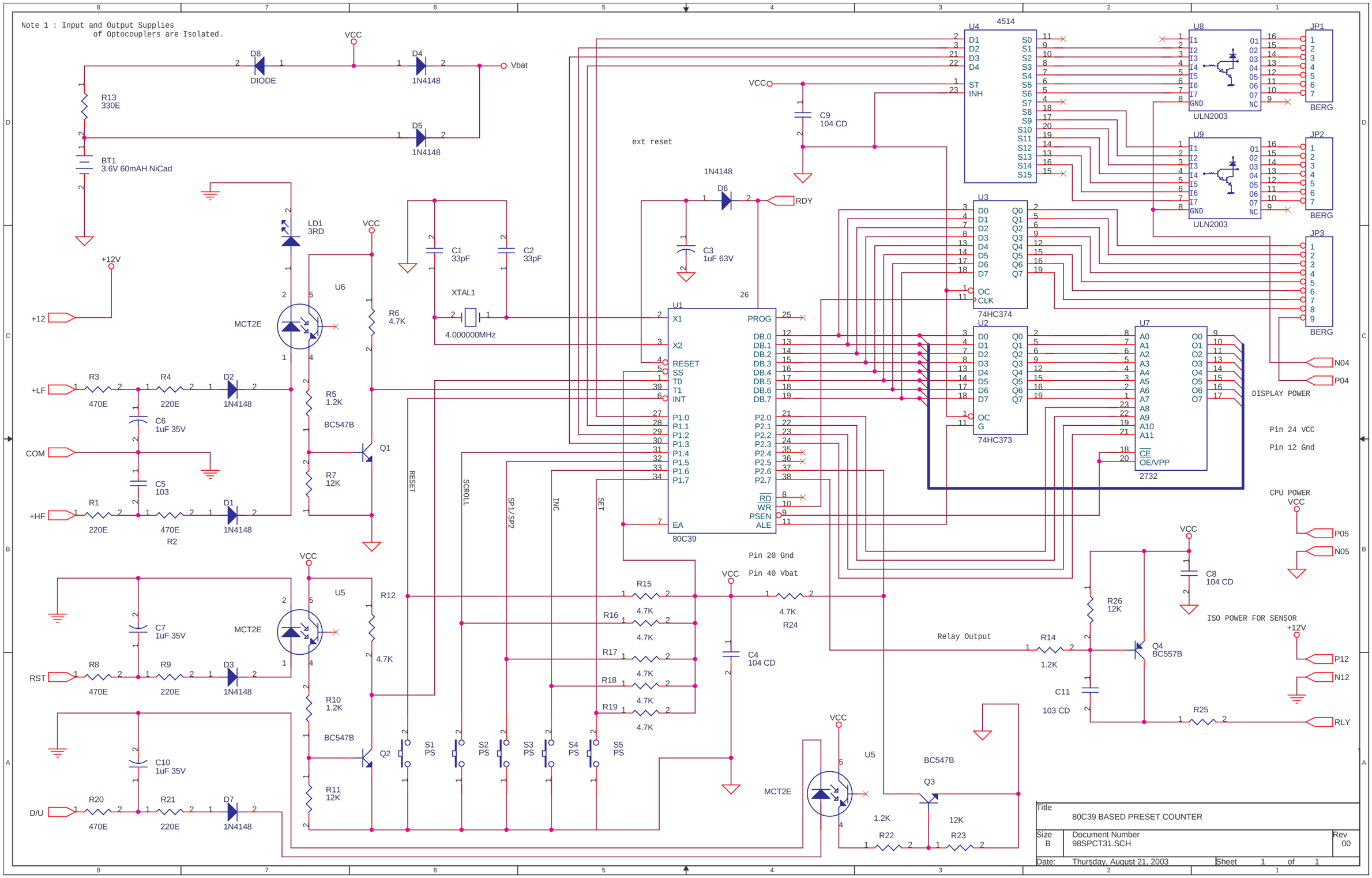
Note 1 : Input and Output Supplies
of Optocouplers are Isolated.
VCC
D8
DIODE
D4
1N4148
Vbat
R13
330E
D5
1N4148
BT1
3.6V 60mAH NiCad
LD1
3RD
+12V
+12
MCT2E
U6
R6
4.7K
C1
33pF
C2
33pF
XTAL1
4.000000MHz
+LF
R3
470E
R4
220E
D2
1N4148
C6
1uF 35V
R5
1.2K
BC547B
Q1
COM
C5
103
R7
12K
+HF
R1
220E
470E
R2
D1
1N4148
U4
4514
U8
ULN2003
JP1
BERG
U9
ULN2003
JP2
BERG
JP3
BERG
ext reset
1N4148
D6
RDY
C9
104 CD
C3
1uF 63V
U3
74HC374
U2
74HC373
U7
2732
DISPLAY POWER
Pin 24 VCC
Pin 12 Gnd
N04
P04
U1
80C39
X1
X2
RESET
SS
T0
T1
INT
P1.0
P1.1
P1.2
P1.3
P1.4
P1.5
P1.6
P1.7
EA
PROG
DB.0
DB.1
DB.2
DB.3
DB.4
DB.5
DB.6
DB.7
P2.0
P2.1
P2.2
P2.3
P2.4
P2.5
P2.6
P2.7
RD
WR
PSEN
ALE
Pin 20 Gnd
Pin 40 Vbat
CPU POWER
VCC
P05
N05
C8
104 CD
ISO POWER FOR SENSOR
+12V
P12
N12
RLY
RESET
SCROLL
SP1/SP2
INC
SET
R15
R16
R17
R18
R19
4.7K
R24
C4
104 CD
Relay Output
R14
1.2K
R26
12K
Q4
BC557B
C11
103 CD
R25
U5
MCT2E
R12
C7
1uF 35V
RST
R8
470E
R9
220E
D3
1N4148
R10
1.2K
BC547B
Q2
S1
PS
S2
PS
S3
PS
S4
PS
S5
PS
R11
12K
C10
1uF 35V
D/U
R20
470E
R21
220E
D7
1N4148
Q3
R22
1.2K
R23
12K
Title
80C39 BASED PRESET COUNTER
Size
B
Document Number
98SPCT31.SCH
Rev
00
Date:
Thursday, August 21, 2003
Sheet
1
of
1