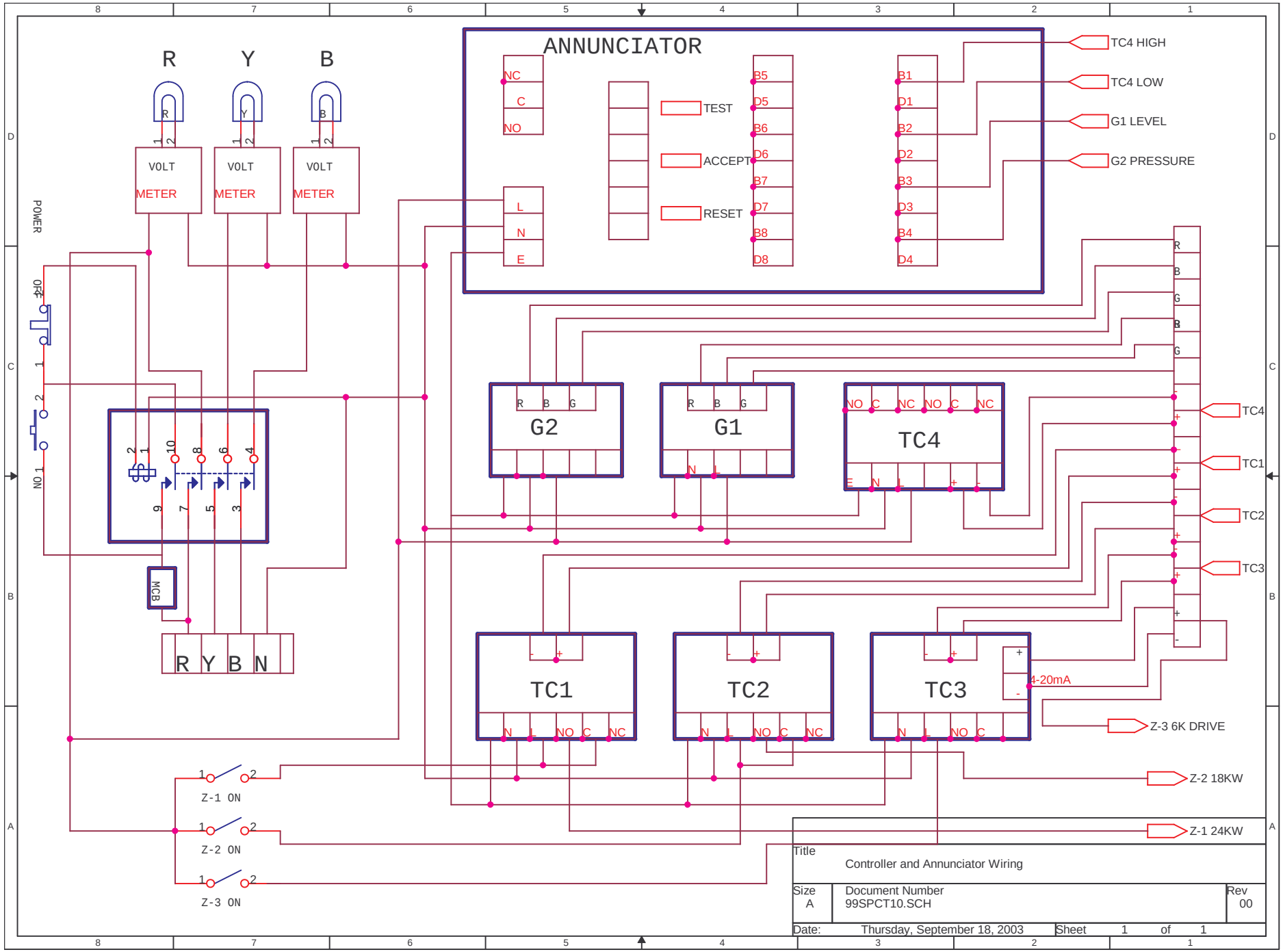
ANNUNCIATOR
NC
C
NO
L
N
E
TEST
ACCEPT
RESET
B5
D5
B6
D6
B7
D7
B8
D8
B1
D1
B2
D2
B3
D3
B4
D4
TC4 HIGH
TC4 LOW
G1 LEVEL
G2 PRESSURE
R
Y
B
VOLT METER
VOLT METER
VOLT METER
POWER
OFF
ON
MCB
R Y B N
G2
G1
TC4
TC1
TC2
TC3
4-20mA
Z-3 6K DRIVE
Z-2 18KW
Z-1 24KW
Z-1 ON
Z-2 ON
Z-3 ON
Title
Controller and Annunciator Wiring
Size
A
Document Number
99SPCT10.SCH
Rev
00
Date: Thursday, September 18, 2003
Sheet 1 of 1