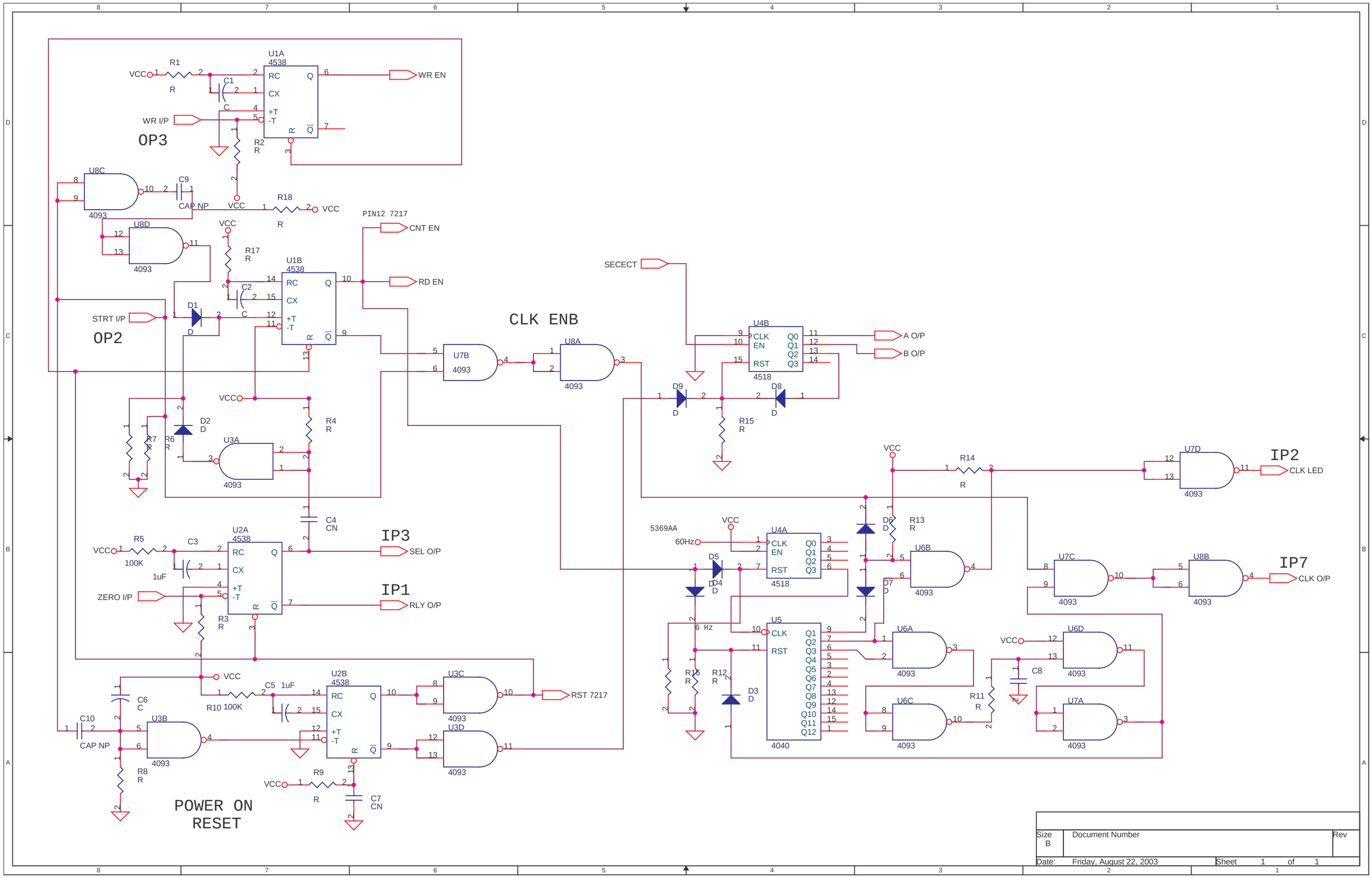

Size B	Document Number	Rev
Date: Friday, August 22, 2003	Sheet 1 of 1	