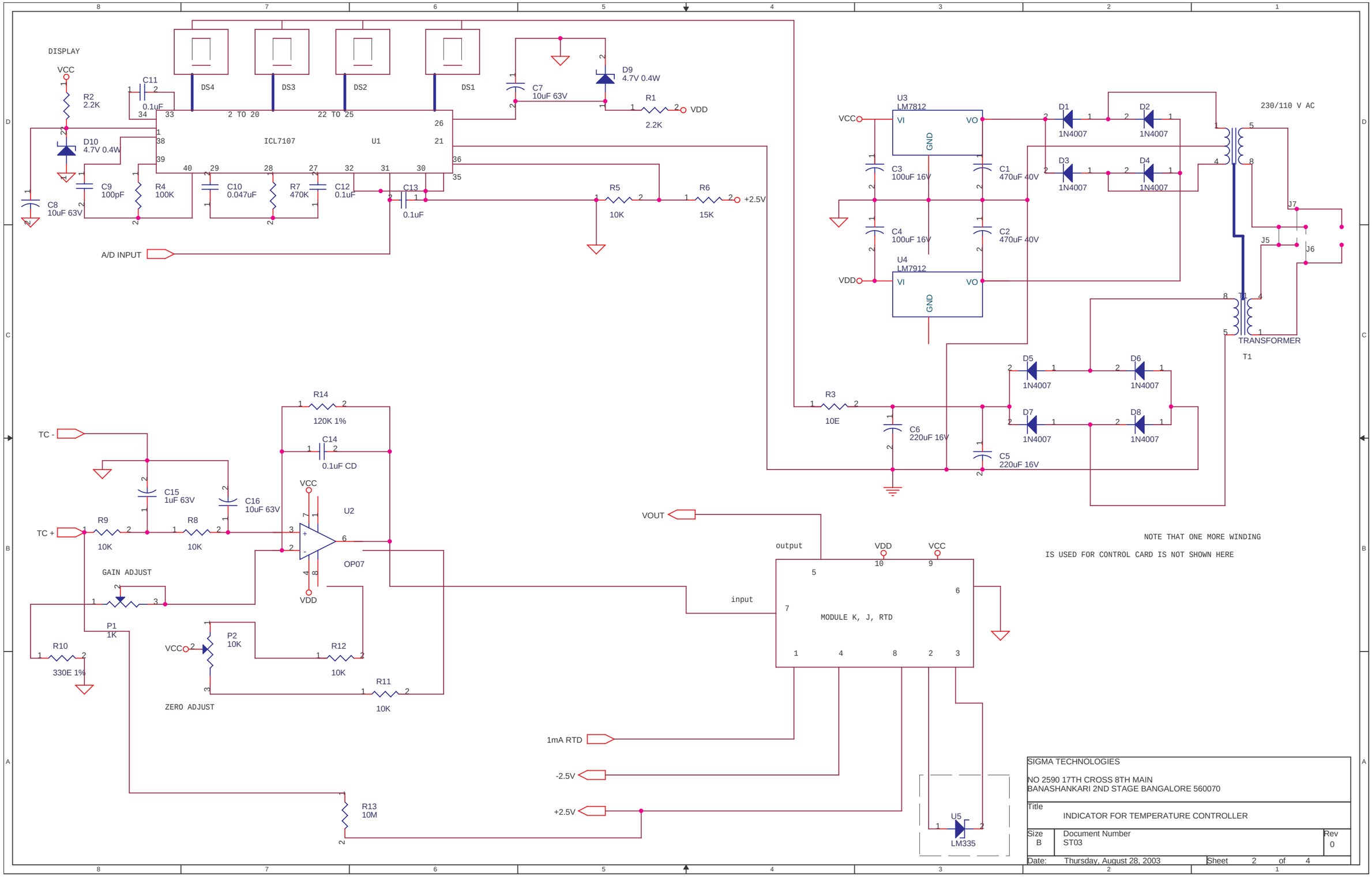

SIGMA TECHNOLOGIES

NO 2590 17TH CROSS 8TH MAIN
BANASHANKARI 2ND STAGE BANGALORE 560070

Title: INDICATOR FOR TEMPERATURE CONTROLLER

Size	Document Number	Rev
B	ST03	0

Date: Thursday, August 28, 2003 Sheet 2 of 4